THIS DRAWING AND SPECIFICATIONS ARE THE PROPERTY OF THE PERFORMANCE WINDOW GROUP. THEY ARE ISSUED IN STRICT CONFIDENCE AND SHALL NOT BE REPRODUCED, COPIED OR USED AS THE BASIS FOR MANUFACTURING WITHOUT WRITTEN PERMISSION.

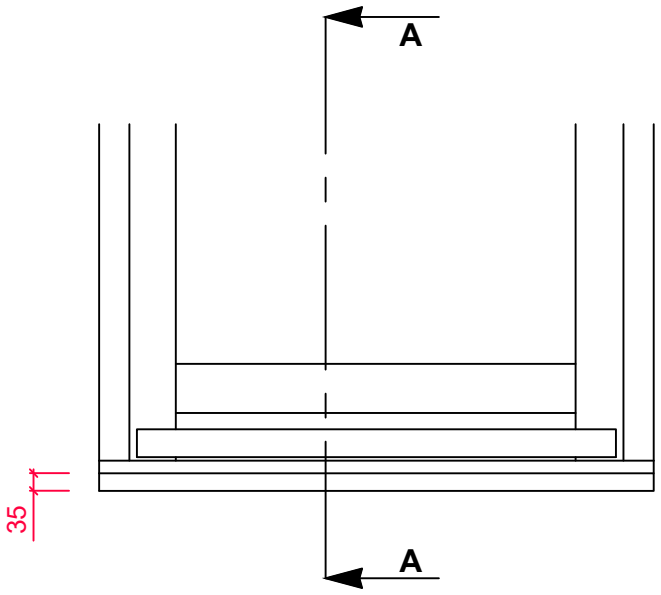

FLUSH CILL ELEVATION

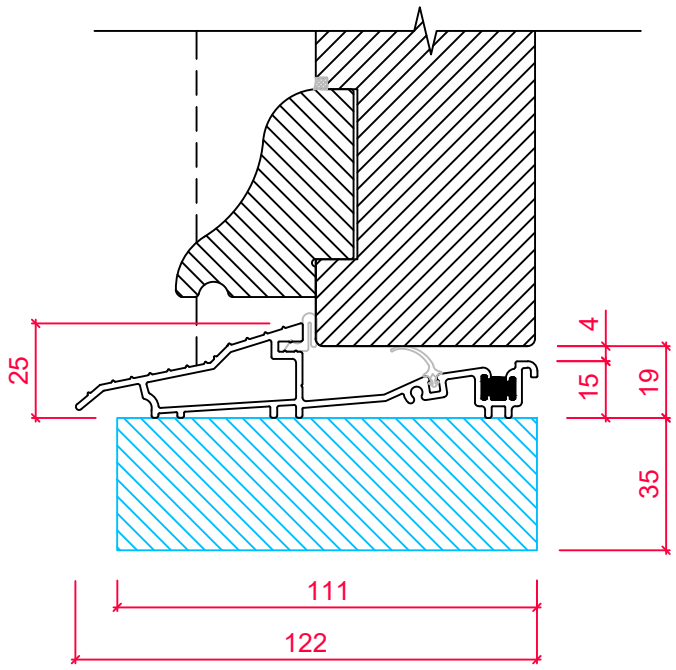

FLUSH CILL SECTION 'A-A'

35 / 60mm Cills available

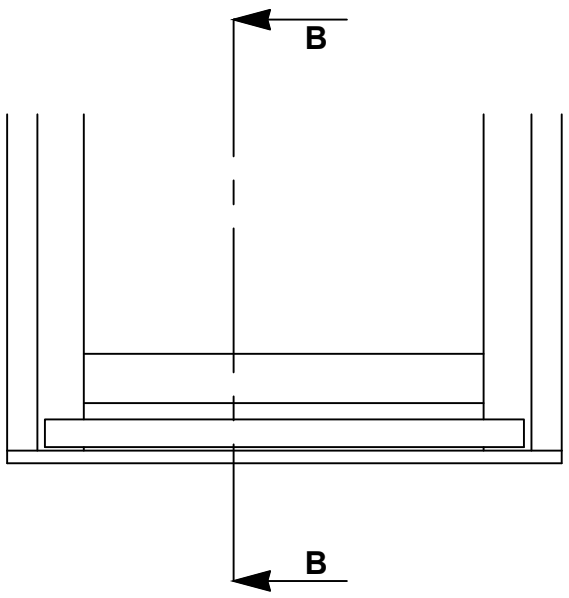

ALUMINIUM THRESHOLD ELEVATION

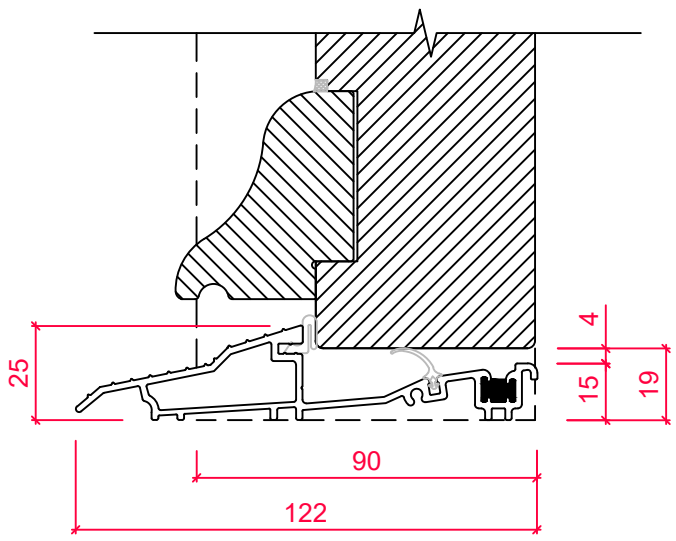

ALUMINIUM THRESHOLD SECTION 'B-B'

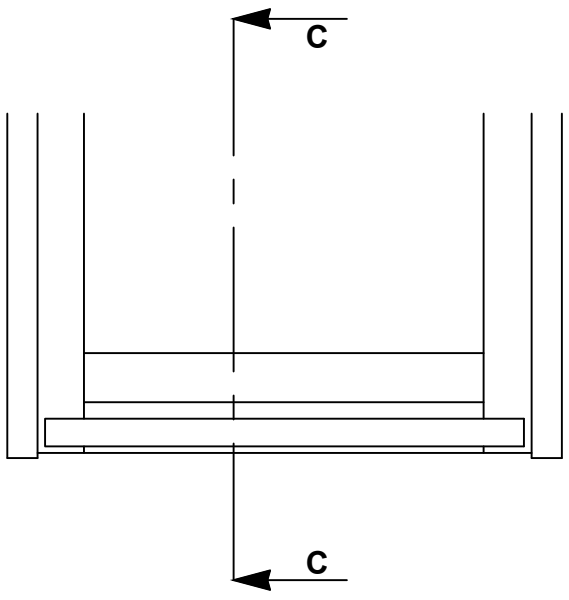

GOAL POST ELEVATION

Cill Horns not available

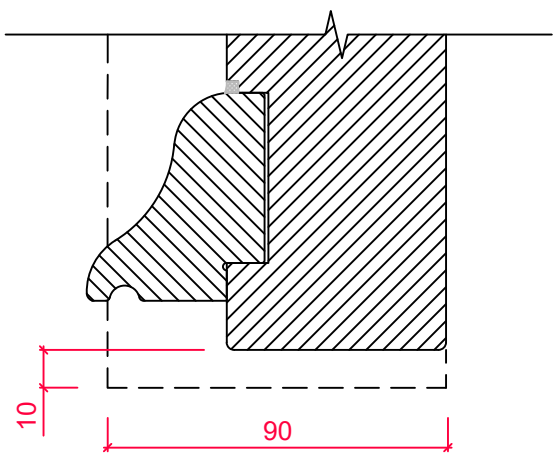

GOAL POST SECTION 'C-C'

TIMBER WINDOWS EST. 2004

TOLERANCES
UNLESS OTHERWISE SPECIFIED

ALL DIMENSIONS IN MM
ALL LINEAR DIMENSIONS ±0.4
ALL ANGLE DIMENSIONS ±0.5°
BREAK ALL SHARP EDGES 0.5

PRODUCT RANGE:
ENTRANCE DOOR - OPEN IN (Ovolo)
24mm Unit

TITLE
VERTICAL SECTION DETAIL
- FLUSH, ALUMINIUM & GOAL POST CILL OPTIONS

Rev B

DRAWN BY:	LH	DATE DRAWN:	01/03/2017	SCALE:	1:2, 1:15

ALL MEASUREMENTS ARE FINISHED DIMENSIONS IN MM. DO NOT SCALE DRAWING! Din A3